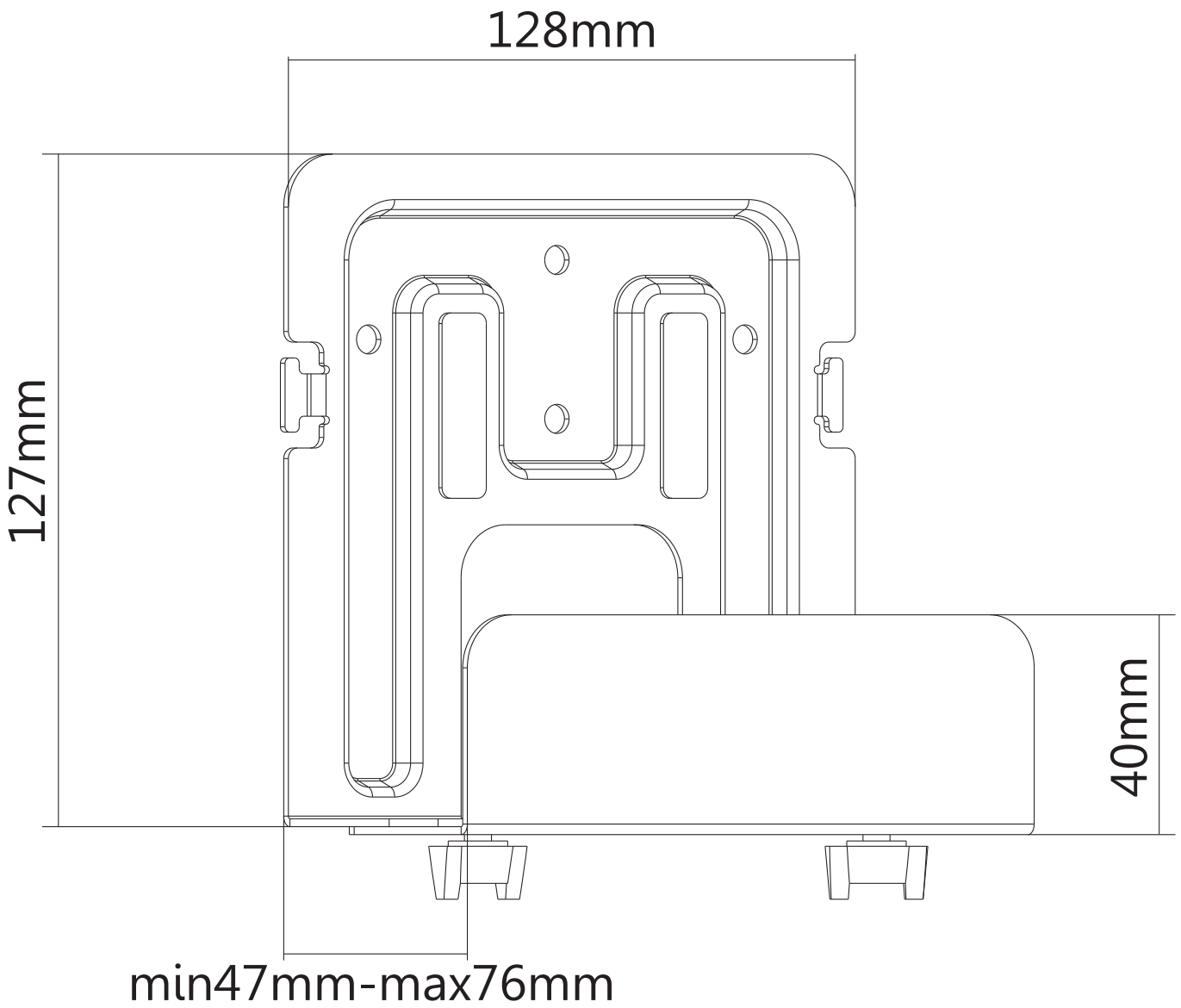
128mm
127mm
40mm
min47mm-max76mm